List of Symbols: KEY

BLK	WIRE COLOR LABEL – INDICATES A BLACK WIRE
RED	WIRE COLOR LABEL – INDICATES A RED WIRE
WHT	WIRE COLOR LABEL – INDICATES A WHITE WIRE
GRN	WIRE COLOR LABEL – INDICATES A GREEN WIRE
YEL	WIRE COLOR LABEL – INDICATES A YELLOW WIRE
ORG	WIRE COLOR LABEL – INDICATES AN ORANGE WIRE
BLU	WIRE COLOR LABEL – INDICATES A BLUE WIRE
18-2	WIRE GAUGE LABEL – INDICATES A GAUGE FOR A CABLE OF MULTIPLE WIRES, FORMATED AS (WIRE GAUGE)-(NUMBER OF WIRES IN CABLE)
18AWG	WIRE GAUGE LABEL – INDICATES A GAUGE FOR A SINGLE WIRE
	CAT5 ETHERNET CONNECTION PORT
	USB CONNECTION PORT
	LCD-JST CONNECTION PORT
	FUSE – NECESSARY SIZING INFORMATION CALLED OUT ON WIRING DIAGRAM
	CABLING – JST AND CAT5 PRE-FABRICATED CABLES
	WIRING – SINGLE WIRE BLACK **OR** WHITE – TYPICAL COMM COLOR
	WIRING – SINGLE WIRE RED – TYPICAL ENERGIZED COLOR
	WIRING – SINGLE WIRE YELLOW – TYPICAL NEUTRAL COLOR
	WIRING – SINGLE WIRE GREEN – TYPICAL GROUNDING COLOR
	WIRING – SINGLE WIRE ORANGE – TYPICAL POWER SIGNALING COLOR
	WIRING – SINGLE WIRE BLUE – TYPICAL POWER SIGNALING COLOR
	SECTION DIVIDER – CONTROL BOX – NOT A PHYSICAL ELEMNT
	WIRING NODE – WIRE BUTT SPLICE CONNECTION
	DIODE – ELECTRICAL DIODE – CURRENT FLOW IN DIRECTION OF ARROW
	EXTERNAL POWER SOURCE – POWER EXTERNAL TO UNIT, PROVIDED TO UNIT – 220VAC
1	NOTATION – NOTE CALL OUT INDICATES A NOTE THAT APPLIES TO MULTIPLE AREAS OR PIECES OF HARDWARE – SMALL NUMERIC CIRCLE
A	NOTATION – WIRE CONTINUITY SYMBOL INDICATES CONTINUITY BETWEEN MATCHING ALPHABETIC SYMBOLS – LARGE ALPHABETIC CIRCLE
	JUMPER – INDICATES PLACEMENT AND TERMINATION LOCATION FOR JUMPER – 2 OR 4 PIN – 2 PIN SHOWN
	WIRING – PASS THROUGH CONNECTOR – RJ-45/RJ-12

Detail View 1: Control Box Section Identification

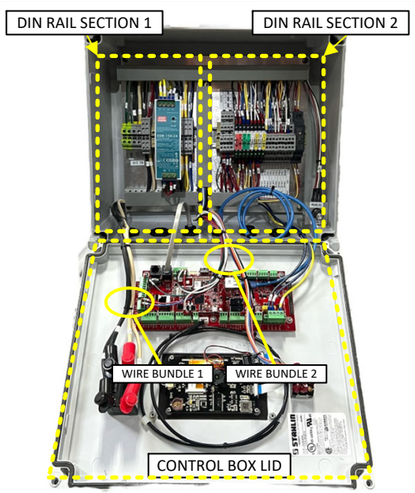

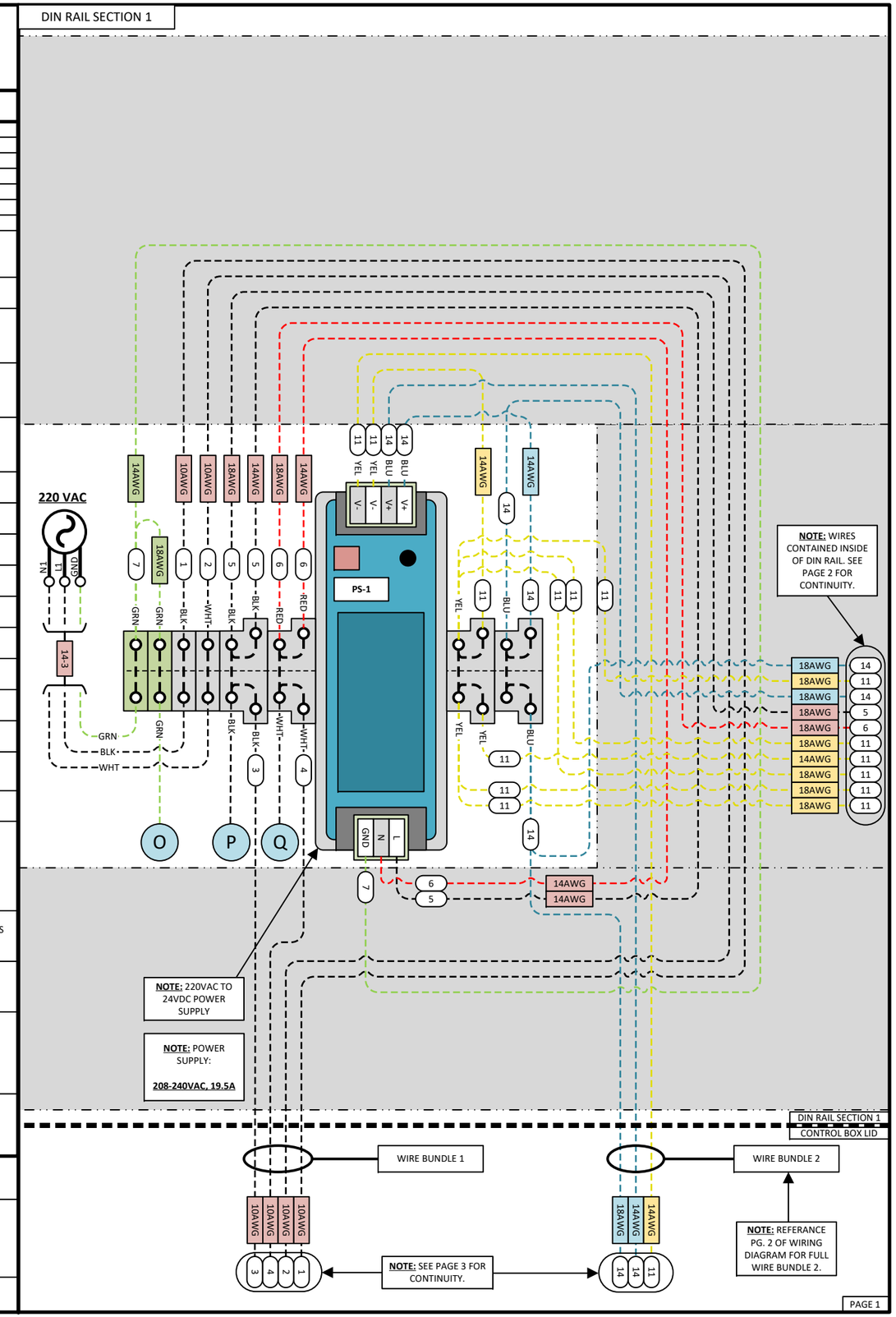

Control System:
- V3.0 Firmware
- 220VAC Input Voltage

Applicable System Numbers:
- LB-10,000C-220V
- LB-14,000C-220V

Revision History: LB-10,000/14,000C-220V

Rev No:	Date:	Description:
A	01/12/2023	Initial Wiring Diagram for LandBased - 10,000 Connect Systems, 220V
B	02/22/2023	Inclusion of LandBased - 14,000 Connect Systems, 220V

LandBased–10,000/14,000C 220V

Revision: B
Rev Date: 02/22/2023
Print Date: 02/22/2023
Drawn by: LSS

Katadyn Desalination

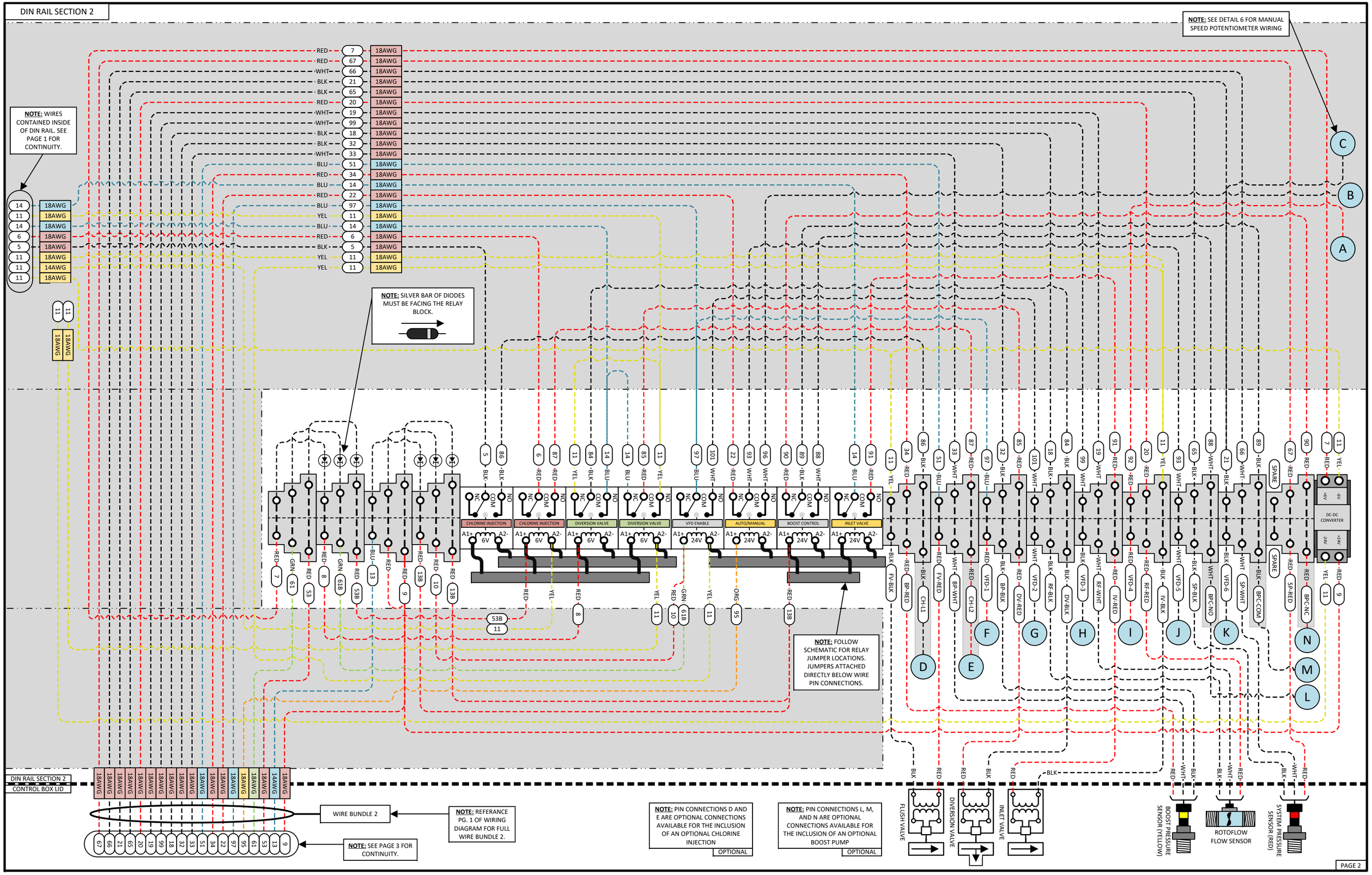
DIN RAIL SECTION 2
NOTE: SEE DETAIL 6 FOR MANUAL SPEED POTENTIOMETER WIRING
NOTE: WIRES CONTAINED INSIDE OF DIN RAIL. SEE PAGE 1 FOR CONTINUITY.
NOTE: SILVER BAR OF DIODES MUST BE FACING THE RELAY BLOCK.
NOTE: FOLLOW SCHEMATIC FOR RELAY JUMPER LOCATIONS. JUMPERS ATTACHED DIRECTLY BELOW WIRE PIN CONNECTIONS.
CHLORINE INJECTION
CHLORINE INJECTION
DIVERSION VALVE
DIVERSION VALVE
VFD ENABLE
AUTO/MANUAL
BOOST CONTROL
INLET VALVE
DC-DC CONVERTER
SPARE
SPARE
DIN RAIL SECTION 2
CONTROL BOX LID
WIRE BUNDLE 2
NOTE: REFERANCE PG. 1 OF WIRING DIAGRAM FOR FULL WIRE BUNDLE 2.
NOTE: SEE PAGE 3 FOR CONTINUITY.
NOTE: PIN CONNECTIONS D AND E ARE OPTIONAL CONNECTIONS AVAILABLE FOR THE INCLUSION OF AN OPTIONAL CHLORINE INJECTION
OPTIONAL
NOTE: PIN CONNECTIONS L, M, AND N ARE OPTIONAL CONNECTIONS AVAILABLE FOR THE INCLUSION OF AN OPTIONAL BOOST PUMP
OPTIONAL
FLUSH VALVE
DIVERSION VALVE
INLET VALVE
BOOST PRESSURE SENSOR (YELLOW)
ROTOFLOW FLOW SENSOR
SYSTEM PRESSURE SENSOR (RED)
PAGE 2

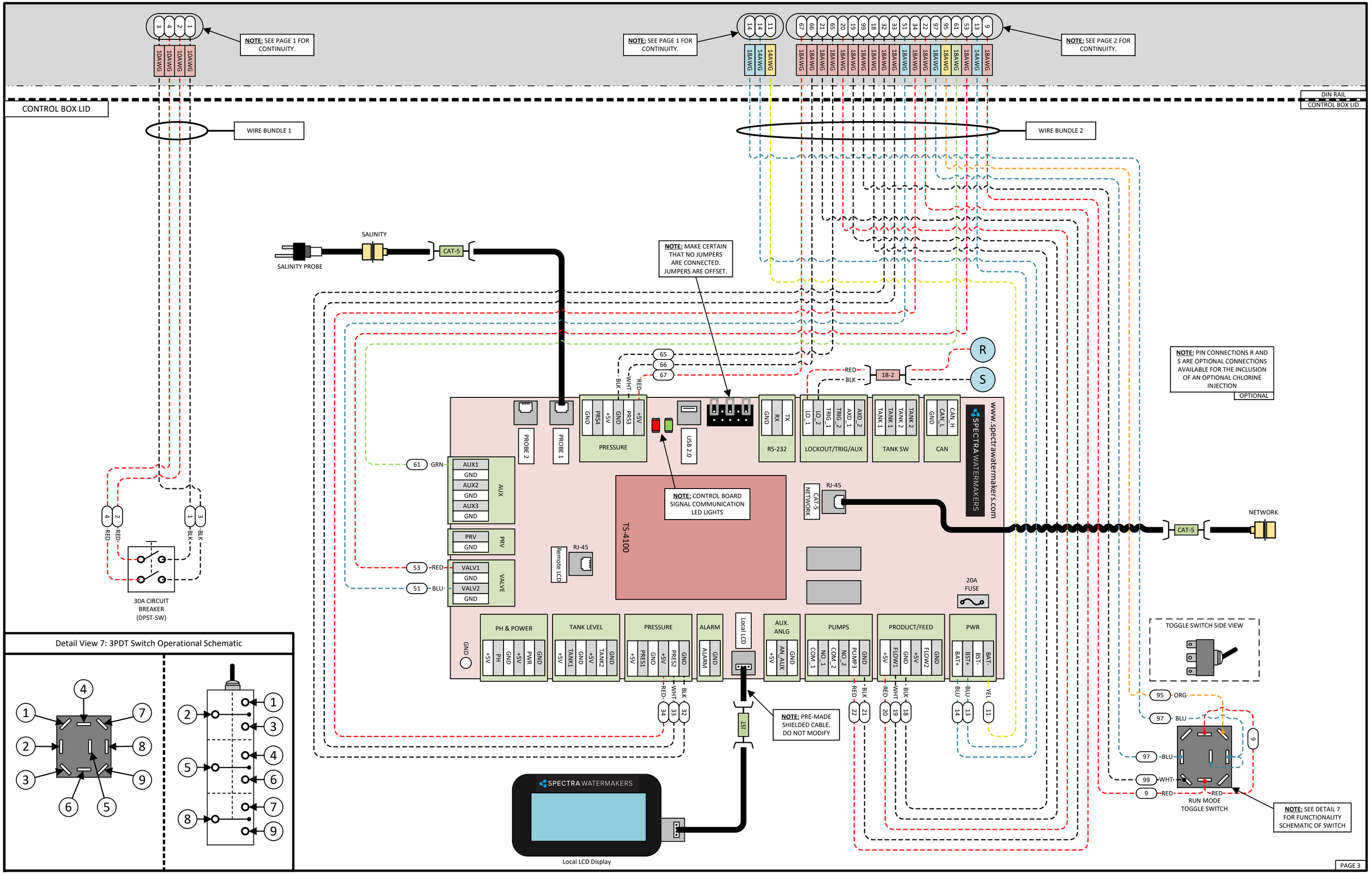
NOTE: SEE PAGE 1 FOR CONTINUITY.
NOTE: SEE PAGE 1 FOR CONTINUITY.
NOTE: SEE PAGE 2 FOR CONTINUITY.
CONTROL BOX LID
DIN RAIL
CONTROL BOX LID
WIRE BUNDLE 1
WIRE BUNDLE 2
SALINITY
SALINITY PROBE
CAT-5
NOTE: MAKE CERTAIN THAT NO JUMPERS ARE CONNECTED. JUMPERS ARE OFFSET.
NOTE: PIN CONNECTIONS R AND S ARE OPTIONAL CONNECTIONS AVAILABLE FOR THE INCLUSION OF AN OPTIONAL CHLORINE INJECTION
OPTIONAL
R
S
18-2
PROBE 2
PROBE 1
PRESSURE
USB 2.0
RS-232
LOCKOUT/TRIG/AUX
TANK SW
CAN
SPECTRA WATERMAKERS
www.spectrawatermakers.com
AUX
PRV
VALVE
NOTE: CONTROL BOARD SIGNAL COMMUNICATION LED LIGHTS
TS-4100
Remote LCD
RJ-45
CAT-5 NETWORK
NETWORK
20A FUSE
30A CIRCUIT BREAKER (DPST-SW)
PH & POWER
TANK LEVEL
PRESSURE
ALARM
Local LCD
AUX. ANLG
PUMPS
PRODUCT/FEED
PWR
JST
NOTE: PRE-MADE SHIELDED CABLE. DO NOT MODIFY
SPECTRA WATERMAKERS
Local LCD Display
TOGGLE SWITCH SIDE VIEW
RUN MODE TOGGLE SWITCH
NOTE: SEE DETAIL 7 FOR FUNCTIONALITY SCHEMATIC OF SWITCH
Detail View 7: 3PDT Switch Operational Schematic
PAGE 3

Detail View 1: Pearson Pump Motor/VFD Wiring Detail

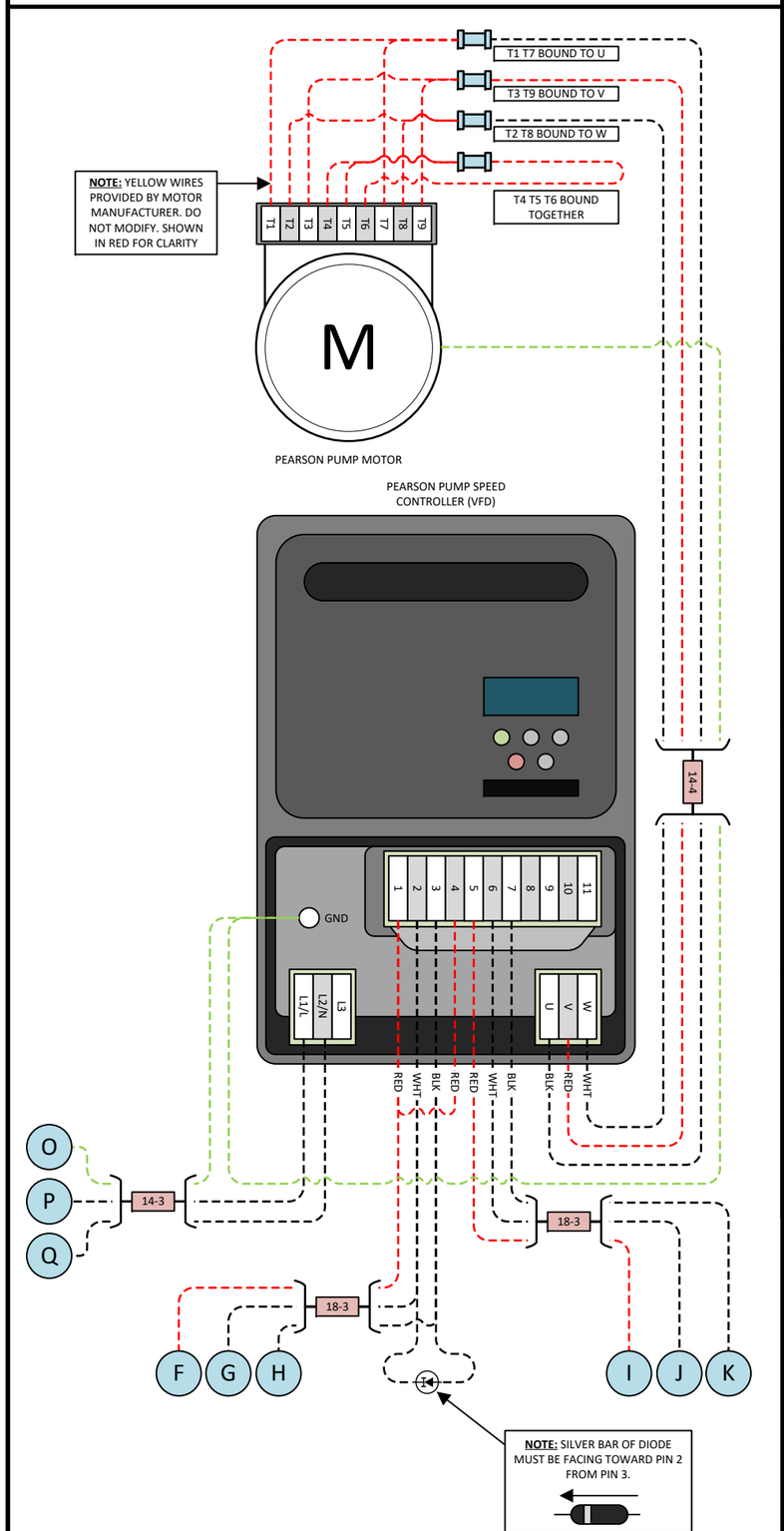

Detail View 2: SPDT DIN-Rail Relay Pin Identification Detail

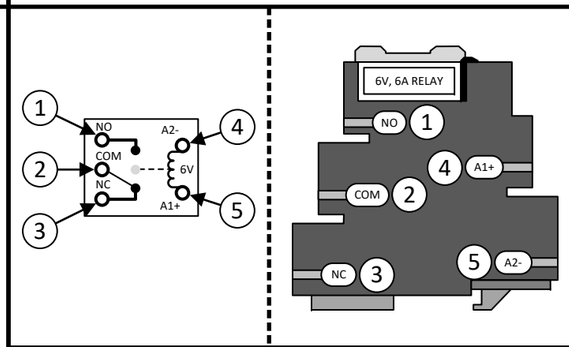

Detail View 3: DIN-Rail 3-Pole 2-Throw Terminal Block Identification Detail

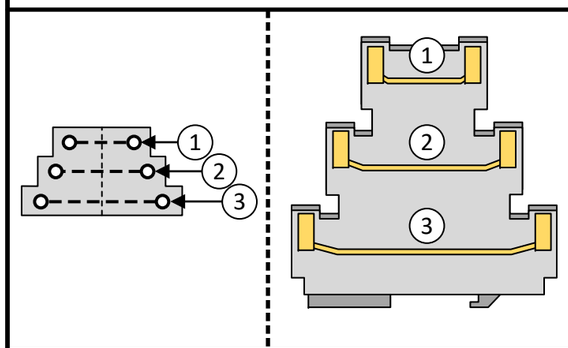

Detail View 4: DIN-Rail 1-Pole 4-Throw Terminal Block Identification Detail

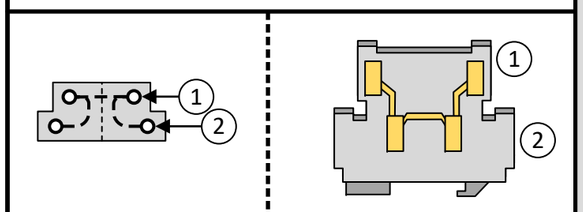

Detail View 5: DIN-Rail 1-Pole 2-Throw Terminal Block Identification Detail

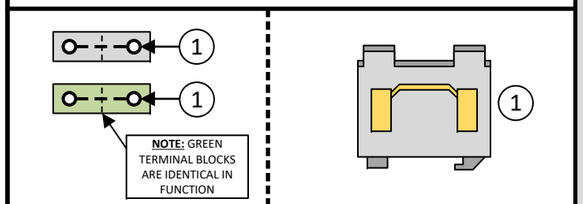

Detail View 6: Chlorine Injection System Wiring Detail (Optional)

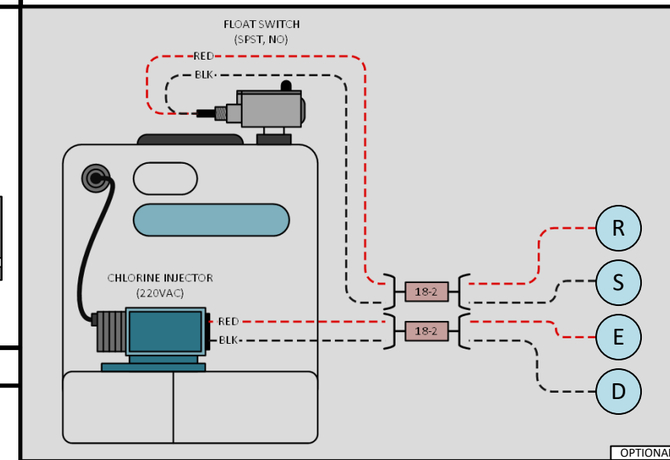

Detail View 7: Boost Pump Motor/VFD Wiring Detail (Optional)

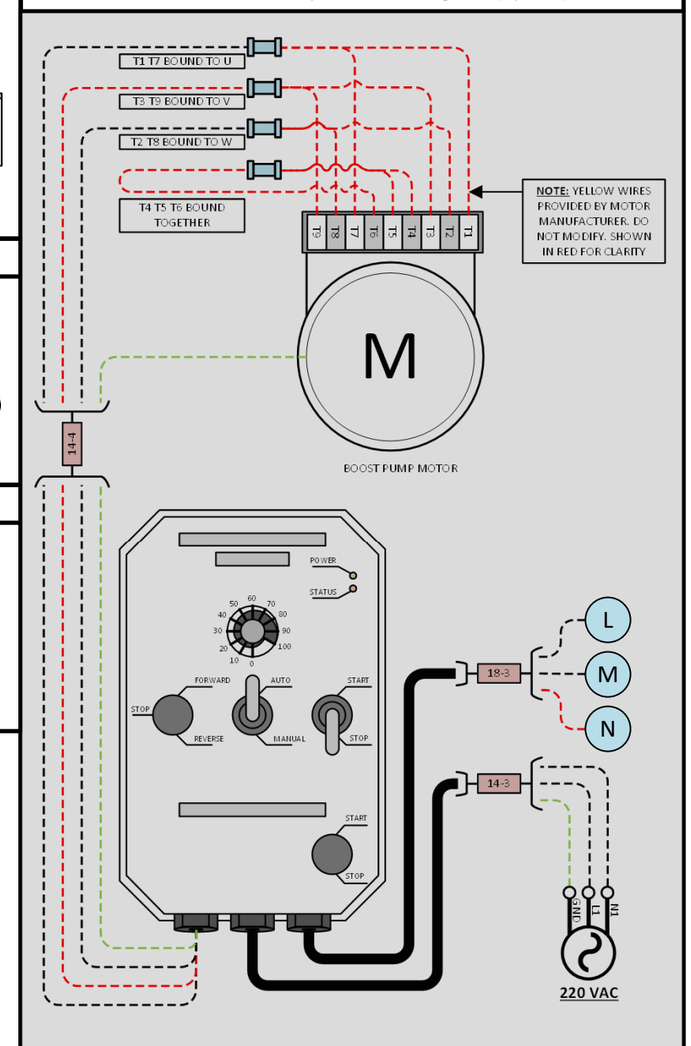
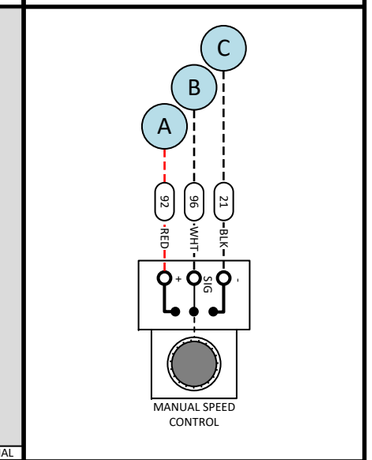
Detail View 8: Potentiometer Wiring Detail